27.Transfer Clutch

A: REMOVAL

1) Remove the transmission assembly from vehicle body. <Ref. to 4AT-37, REMOVAL, Automatic Transmission Assembly.>
2) Remove the extension case, and then remove the transfer clutch. <Ref. to 4AT-70, REMOVAL, Extension Case.> <Ref. to 4AT-71, DISASSEMBLY, Extension Case.>

B: INSTALLATION

1) Select the thrust needle bearing. <Ref. to 4AT-77, ADJUSTMENT, Transfer Clutch.>
2) Install the transfer clutch assembly to the case.

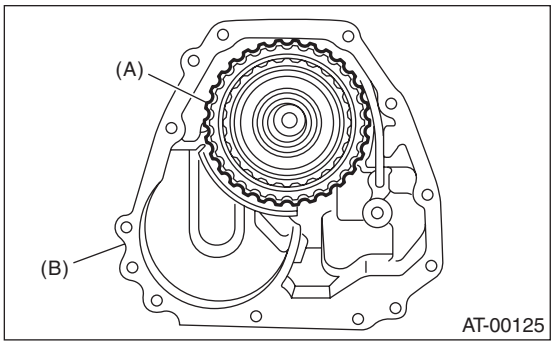

(A) Transfer clutch
(B) Extension case

3) Replace with a new gasket, tighten bolts and affix the case.

Tightening torque:
25 N·m (2.5 kgf-m, 18.4 ft-lb)

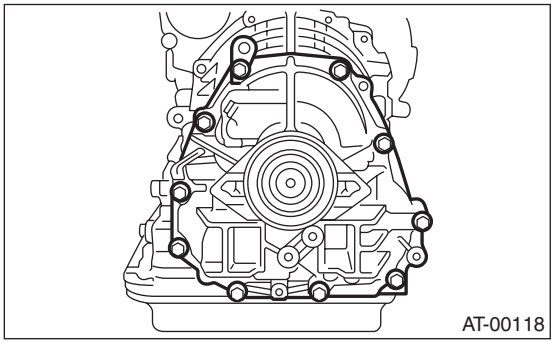

4) Install the transmission assembly to the vehicle. <Ref. to 4AT-39, INSTALLATION, Automatic Transmission Assembly.>

C: DISASSEMBLY

1) Remove the seal ring.

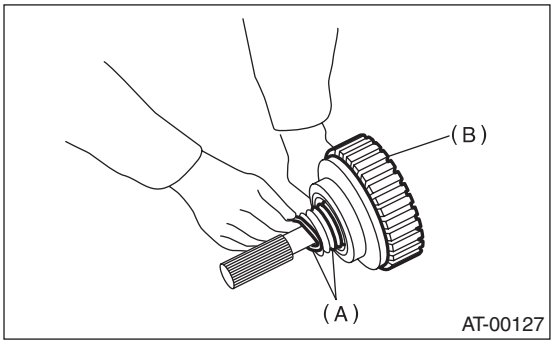

(A) Seal ring
(B) Transfer clutch

2) Remove the ball bearing using the ST and the press.
ST 498077600 REMOVER

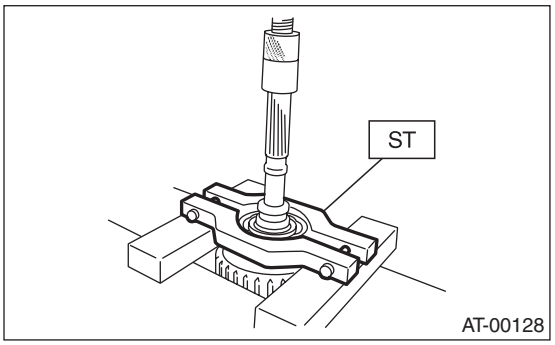

3) Remove the snap ring, and then take out the pressure plate, drive plate and driven plate.

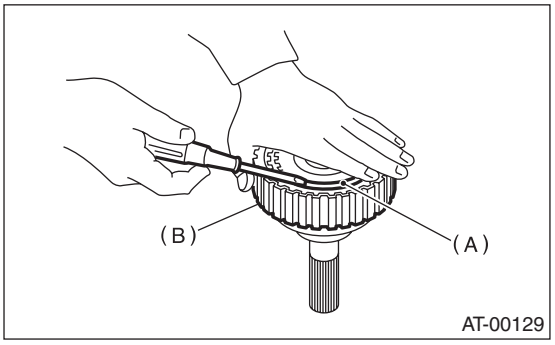

(A) Snap ring
(B) Transfer clutch

4) Using the ST1, ST2 and ST3, remove the snap ring, then take out the return spring and transfer clutch piston seal.

ST1 399893600 PLIER
ST2 398673600 COMPRESSOR
ST3 398623600 SEAT

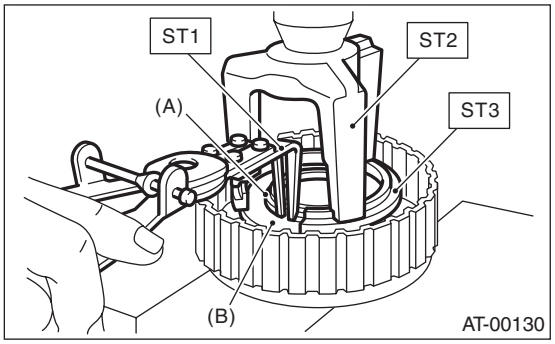

(A) Snap ring
(B) Transfer piston seal

5) Apply compressed air to the rear drive shaft, to remove the piston.

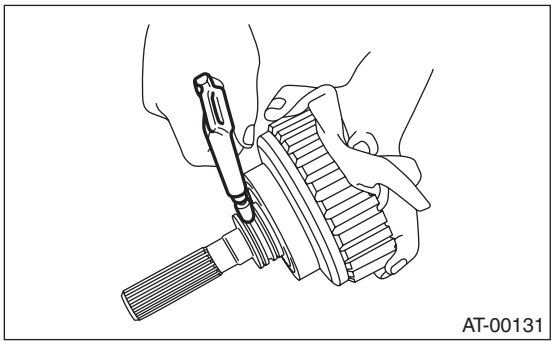

D: ASSEMBLY

1) Install the transfer clutch piston.

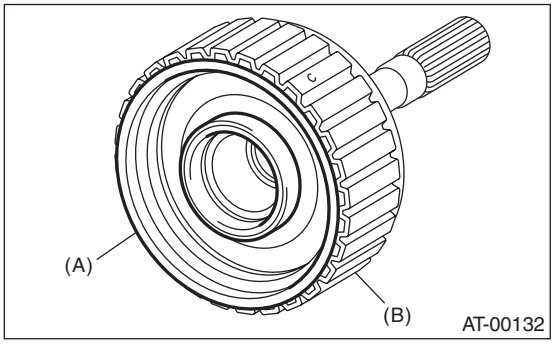

(A) Transfer clutch piston
(B) Rear drive shaft

2) Install the return spring to the transfer piston.

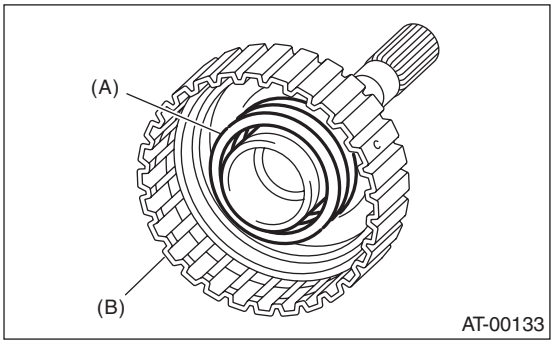

(A) Return spring
(B) Rear drive shaft

3) Apply ATF to the lip of transfer clutch piston seal, then install.

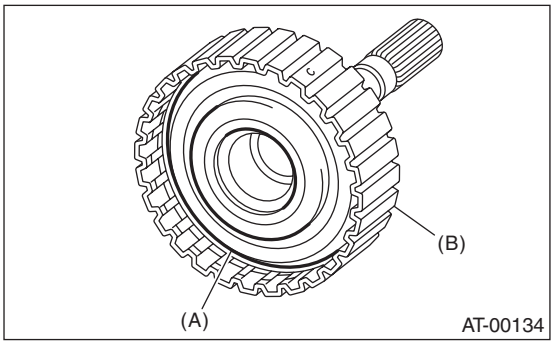

(A) Transfer clutch piston seal
(B) Rear drive shaft

4) Attach the ST to the rear drive shaft.

ST 499257300 SNAP RING OUTER GUIDE

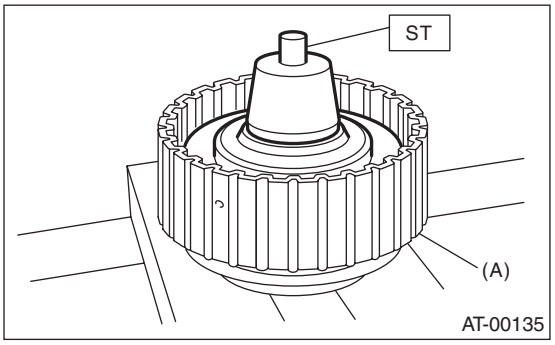

(A) Rear drive shaft

5) Install the snap ring to the ST.
ST 499257300 SNAP RING OUTER GUIDE

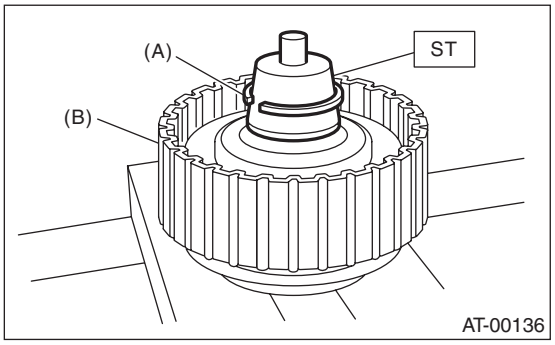

(A) Snap ring
(B) Transfer clutch

6) Install the snap ring to the rear drive shaft using ST1 and ST2.
ST1 499257300 SNAP RING OUTER GUIDE
ST2 499247400 INSTALLER

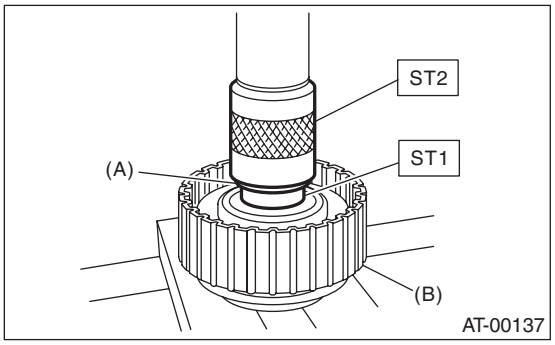

(A) Snap ring
(B) Transfer clutch

7) Install the driven plate, drive plate, pressure plate and snap ring.

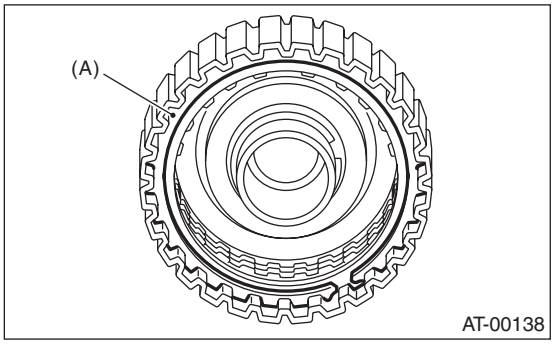

(A) Snap ring

8) Apply compressed air to see if the assembled parts move smoothly.

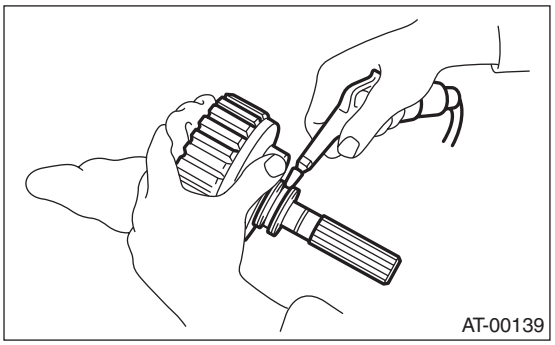

9) Check clearance between the snap ring and pressure gauge. <Ref. to 4AT-77, INSPECTION, Transfer Clutch.>
10) Press-fit new ball bearing using ST.
ST 899580100 INSTALLER

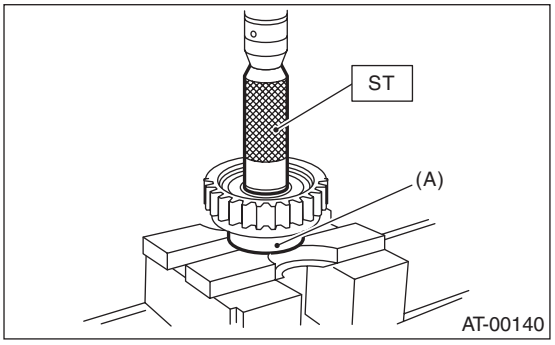

(A) Ball bearing

11) Apply Vaseline to a new seal ring and attach to the seal ring groove of the shaft.

NOTE:
While installing the seal ring, not to stretch the seal ring excessively.

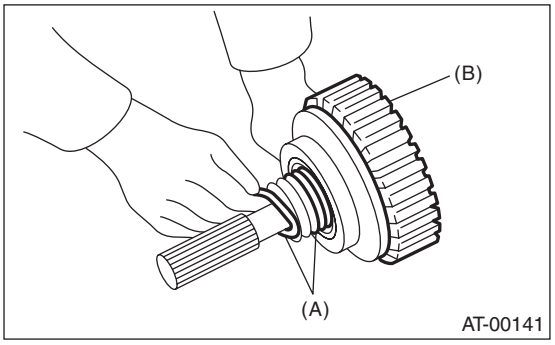

(A) Seal ring
(B) Transfer clutch

12) Install the transfer clutch assembly while taking care not to damage the seal ring.

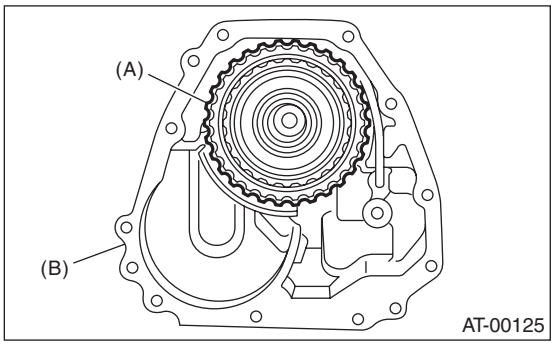

(A) Transfer clutch
(B) Extension case

E: INSPECTION

- Inspect the drive plate facing for wear and damage.
- Make sure the snap ring is not worn and the return spring has no permanent distortion, damage, or deformation.
- Inspect the seal ring for damage.
- Inspect the extension end play, and adjust it to within the standard value. <Ref. to 4AT-77, ADJUSTMENT, Transfer Clutch.>

1) Check clearance between the snap ring and pressure gauge.
2) Before measuring clearance, place same thickness shims on both sides to prevent the pressure plate from tilting.
3) When the clearance is outside standards, select the appropriate pressure plate on the transfer clutch piston side to adjust. If the service limit is exceeded, replace the drive plate and select and adjust the pressure plate so that the clearance will be within standard values.

Initial standard:
0.7 — 1.1 mm (0.028 — 0.043 in)

Limit thickness:
1.6 mm (0.063 in)

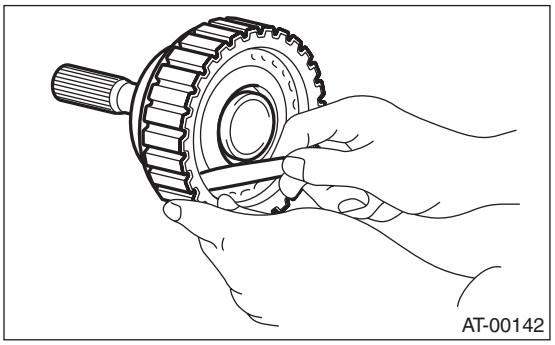

Pressure plate	
Part No.	Thickness mm (in)
31593AA151	3.3 (0.130)
31593AA161	3.7 (0.146)
31593AA171	4.1 (0.161)
31593AA181	4.5 (0.177)

4) Check for tight corner braking phenomenon when the vehicle is moved forward with the steering fully turned. If tight corner braking occurs, perform the following procedures.
(1) With the steering wheel held at fully turned position, drive the vehicle in “D” range and with vehicle speed at approx. 5 km/h (3 MPH) in both clockwise and counterclockwise directions for approx. ten times each, while repeating acceleration and braking intermittently.
(2) If the tight corner braking phenomenon still persists, drive the vehicle again in a circle for several laps.

F: ADJUSTMENT

1. MP-T MODEL

1) Using the ST, measure distance “A” from the end of the ST to the rear drive shaft end face.
ST 398643600 GAUGE

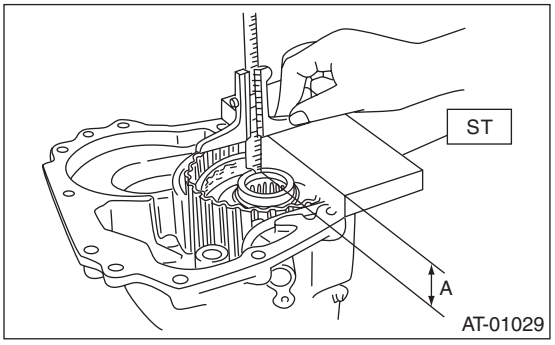

A Measured value

2) Measure distance “B” from the transmission case mating surface to the end of ST using ST1 and ST2.
ST1 398643600 GAUGE
ST2 499577000 GAUGE

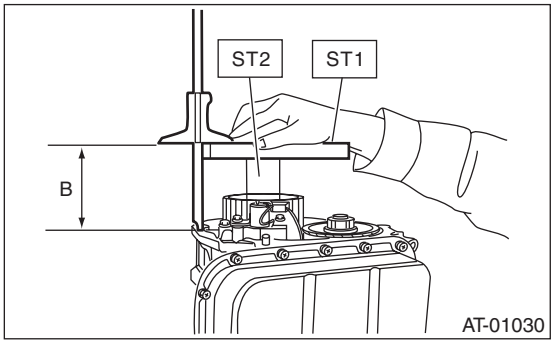

B Measured value

3) Calculation formula:
T = A – B + 35.4 mm [T = A – B + 1.3937 in]

Thrust needle bearing	
Part No.	Thickness mm (in)
806536020	3.8 (0.150)
806535030	4.0 (0.157)
806535040	4.2 (0.165)
806535050	4.4 (0.173)
806535060	4.6 (0.181)
806535070	4.8 (0.189)
806535090	5.0 (0.197)

2. VTD MODEL

1) Insert the rear drive shaft into the reduction drive gear and center differential assembly.

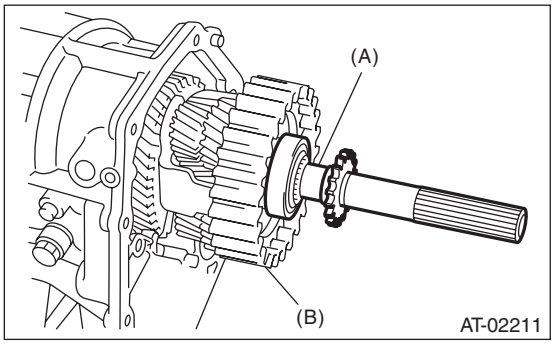

(A) Rear drive shaft
(B) Center differential carrier

2) Using the ST, measure distance “A” from the end of the ST to the rear drive shaft ball bearing outer ring mating surface.
ST 398643600 GAUGE

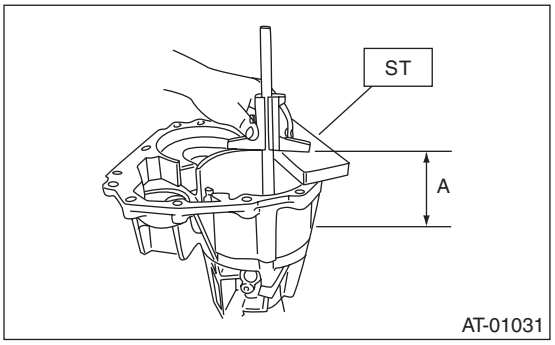

A Measured value

3) Using the ST, measure the distance “B” from the transmission case mating surface to end of ST.
ST 398643600 GAUGE

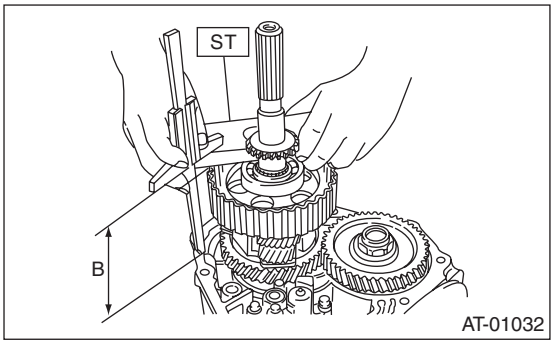

B Measured value

4) Calculation formula:
Calculation of “T”:
When the clearance is 0.05 mm (0.0020 in), select up to 4 adjustment shims to meet the clearance value from the table.
When the clearance is 0.05 mm (0.0020 in)
T = A – B + 0.40 mm
[T = A – B + 0.0157 in]
When the clearance is 0.25 mm (0.0098 in)
T = A – B + 0.20 mm
[T = A – B + 0.0079 in]
T: Shim clearance
A: Distance from the ST end face to the rear drive shaft ball bearing outer ring contact face.
B: Distance from the mating surface of the transmission case to the end of the ST
T: Shim thickness
0.05 — 0.25 mm (0.0020 — 0.0098 in)

Adjustment shim	
Part No.	Thickness mm (in)
33281AA001	0.2 (0.008)
33281AA011	0.5 (0.020)